Part Number	Slide Length	Slide Travel	Load Rating lb [kg]/pair **	A	B	C	D	E
2601-8	7.87 [200]	8.23 [209]	35 lb [16 kg]	5.04 [128.0]				
2601-10	9.84 [250]	10.20 [259]	50 lb [23 kg]	5.04 [128.0]				
2601-12	11.81 [300]	12.13 [308]	70 lb [32 kg]	5.04 [128.0]	8.82 [224.0]			
2601-14	13.78 [350]	14.06 [357]	75 lb [34 kg]	5.04 [128.0]	8.82 [224.0]			
2601-16	15.75 [400]	15.98 [406]	70 lb [32 kg]	5.04 [128.0]	8.82 [224.0]	12.60 [320.0]		
2601-18	17.72 [450]	17.95 [456]	65 lb [30 kg]	5.04 [128.0]	8.82 [224.0]	13.86 [352.0]		
2601-20	19.69 [500]	19.88 [505]	63 lb [29 kg]	5.04 [128.0]	8.82 [224.0]	13.86 [352.0]	16.38 [416.0]	
2601-22	21.65 [550]	21.81 [554]	60 lb [27 kg]	5.04 [128.0]	8.82 [224.0]	13.86 [352.0]	17.64 [448.0]	19.25 [489.0]

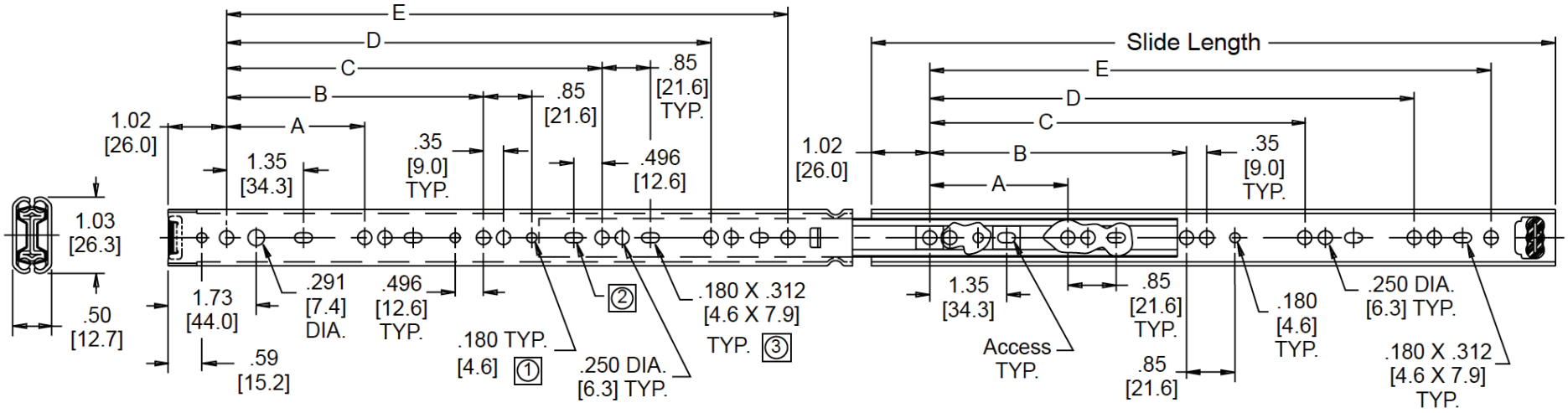

INCHES
[mm]

www.ALLEGISCORP.com ***1-866-378-7550***		MATERIAL / FINISH : Cold rolled Steel	
REV. : 1 : 1	DATE : 9-08-2020	DESCRIPTION : Drawer Slide	DRAWING NO. : 2601 Series (See Chart)